FC6691 Bottom raised bed/30 120x120 cm EXTENSION

FC1931	8 pcs.	560 x 250 mm
FC1935	2 pcs.	560 x 137 mm
FC2098	4 pcs.	L= 275 mm
FC2410	2 pcs.	
FC2088	4 pcs.	
FC2491	8 pcs.	M6 x10
FC2489	8 pcs.	M6

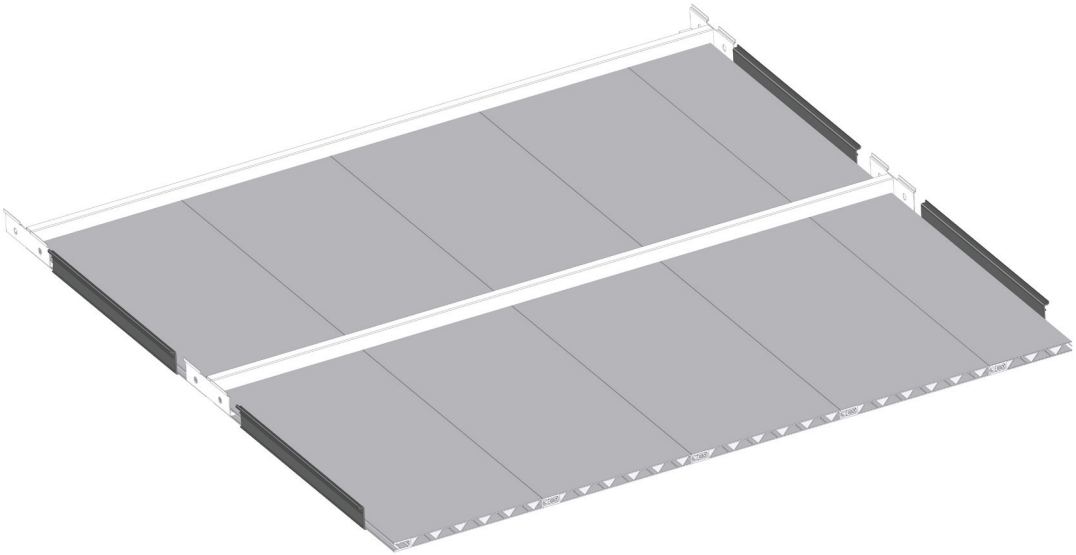

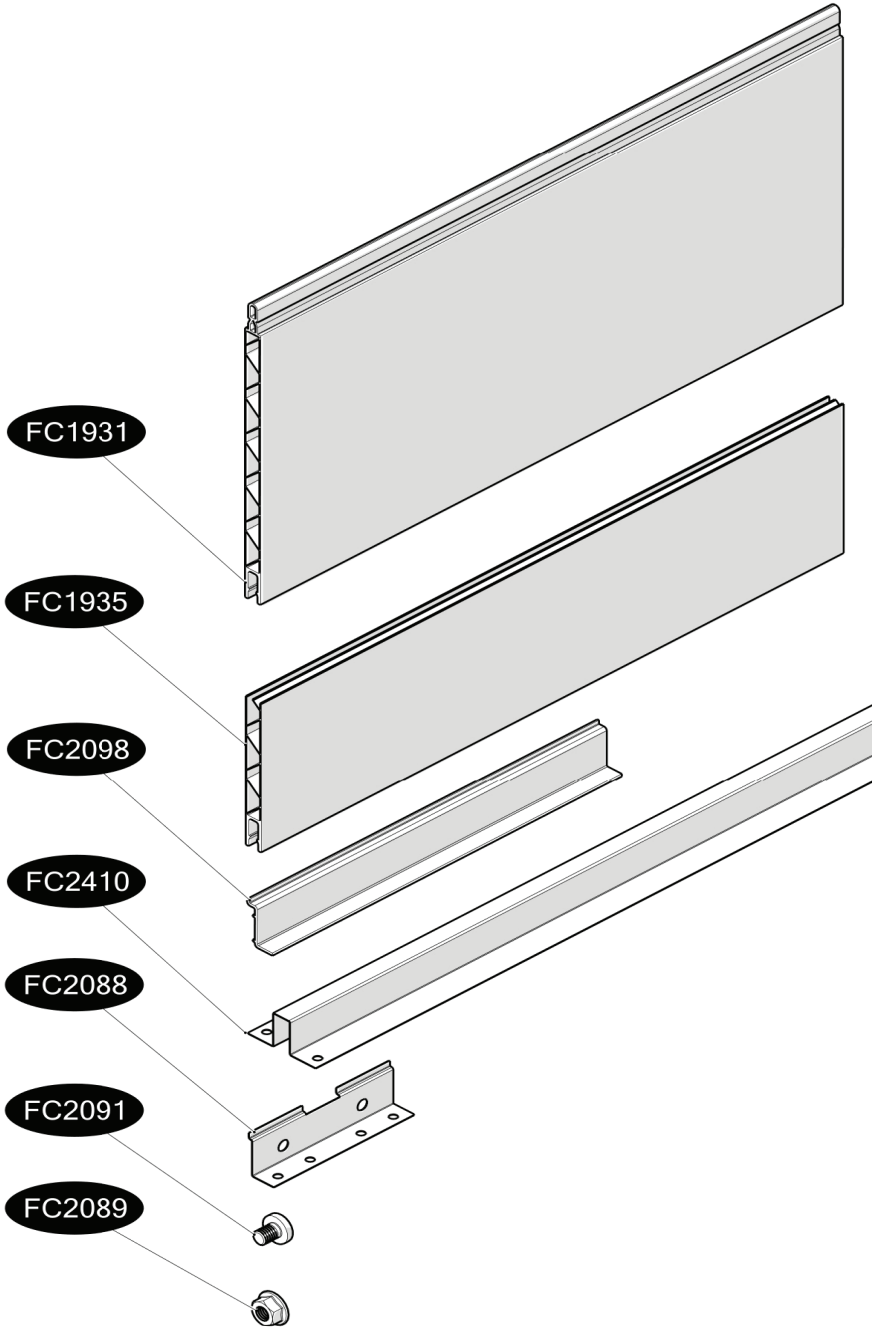

www.growcamp.dk
info@growcamp.dk

1 FC6691 Bottom raised bed/30 120x120 cm EXTENSION

BASIC
manual FC6690

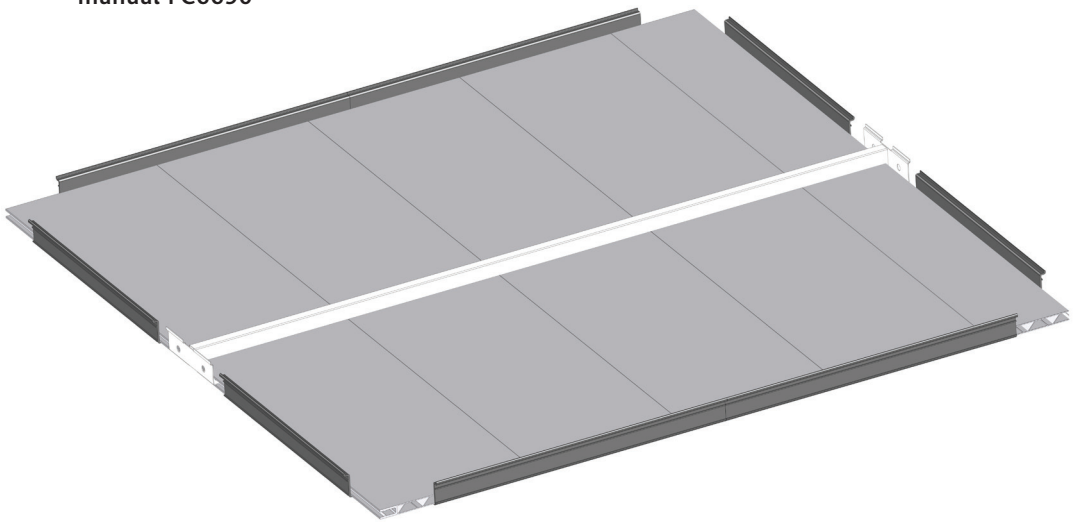

2

EXTENSION

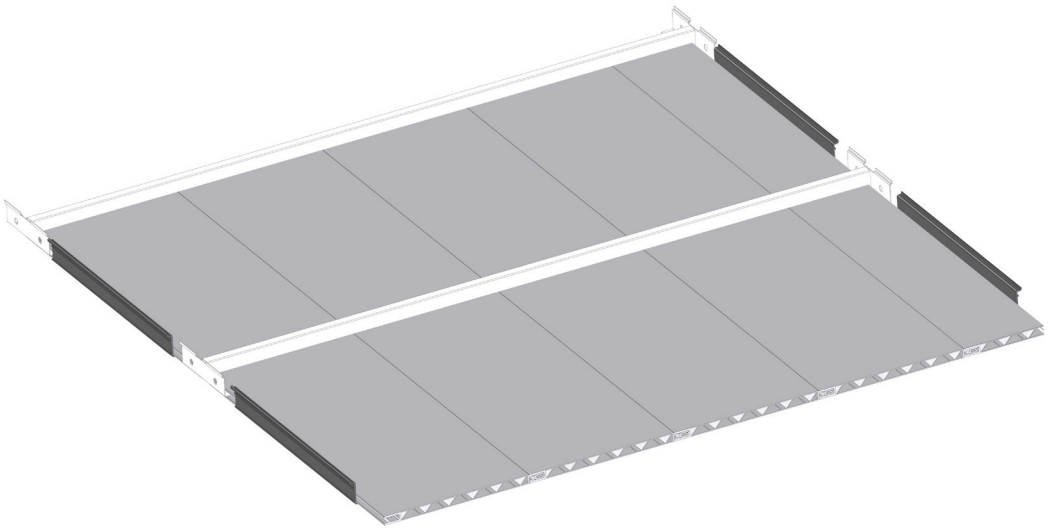

3

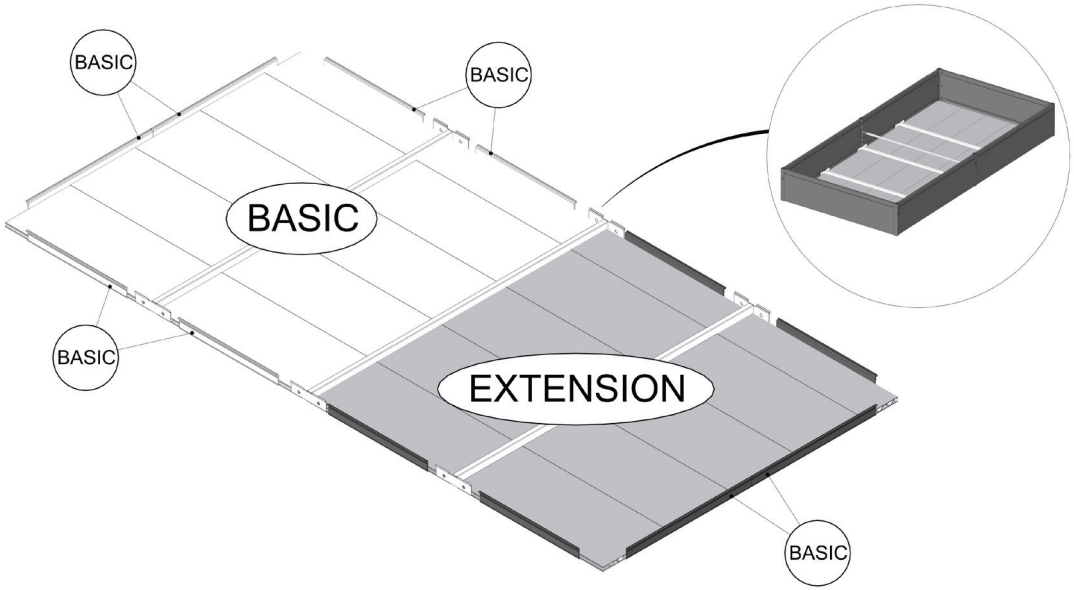
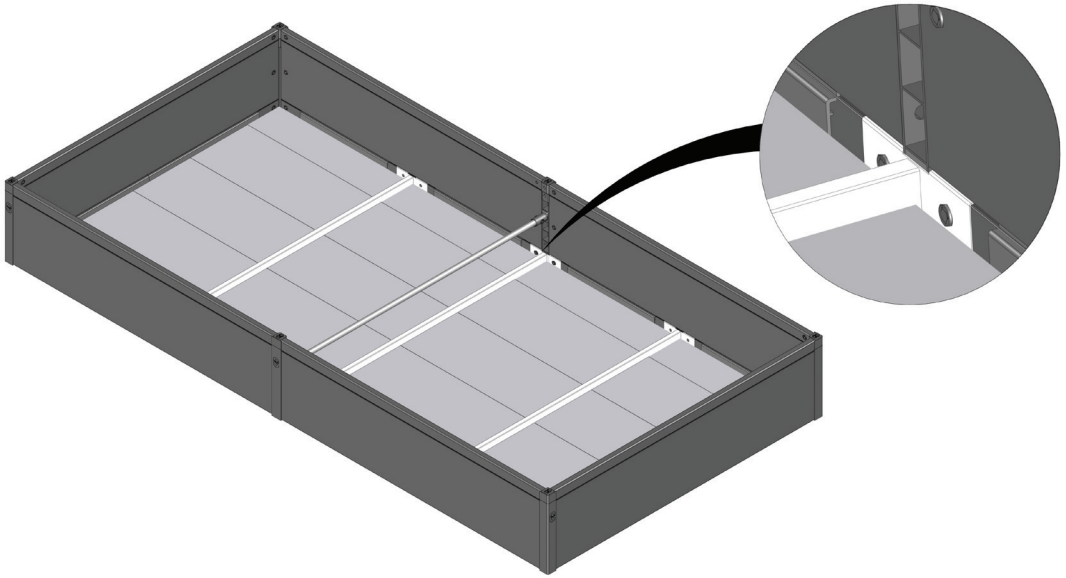
4