FC5441 Top section for WOOD EXTENSION 120x120

FC2160	4 pcs.	621 mm
FC2111	1 pcs.	1140 mm
FC2171	4 pcs.	619 mm
FC2191	2 pcs.	1128 mm
FC2292	1 pcs.	
FC2416	3 pcs.	1116 mm
FC2307	2 pcs.	
FC2310	2 pcs.	
FC2313	4 pcs.	
FC2326	2 pcs.	
FC2341	2 pcs.	
FC2343	1 pcs.	
FC2460	2 pcs.	1214 mm
FC2450	4 pcs.	
FC2492	10 pcs.	3,5 x 16 mm torx 10
FC2527	2 pcs.	
FC2557	2 pcs.	

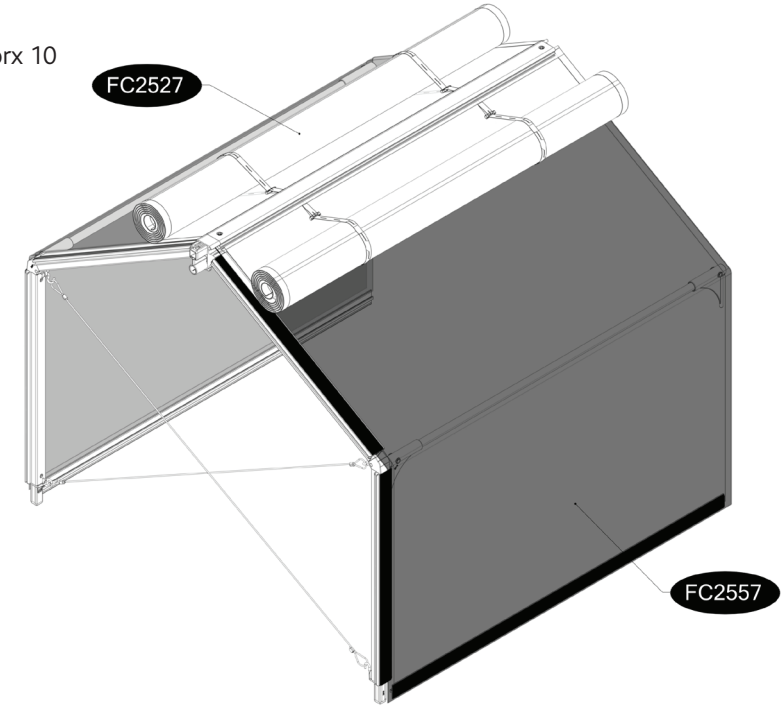

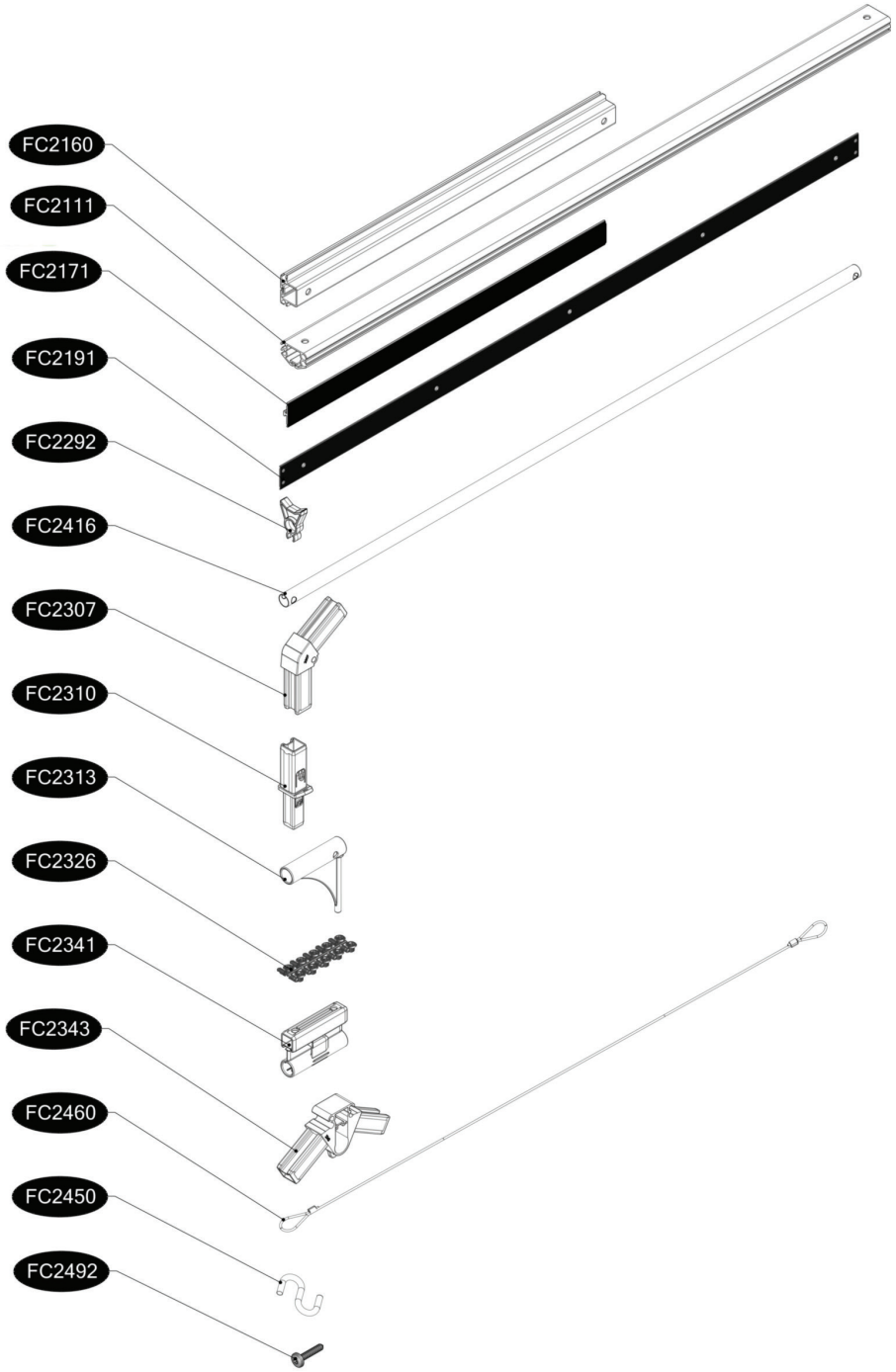

www.growcamp.dk
info@growcamp.dk

1 FC5441 Top section for WOOD EXTENSION

BASIC
manual FC5430

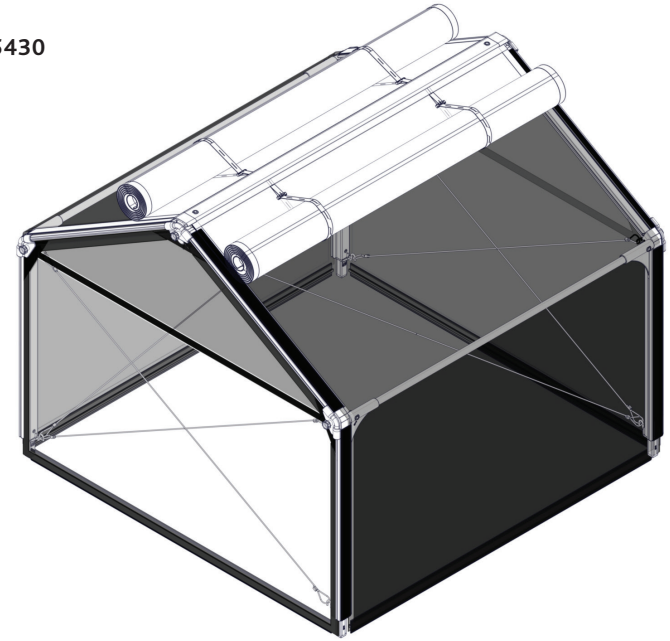

2

EXTENSION

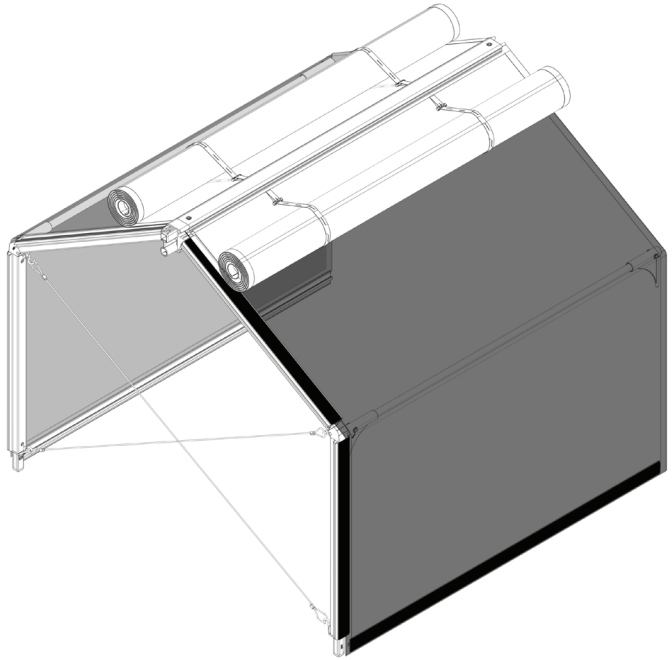

3

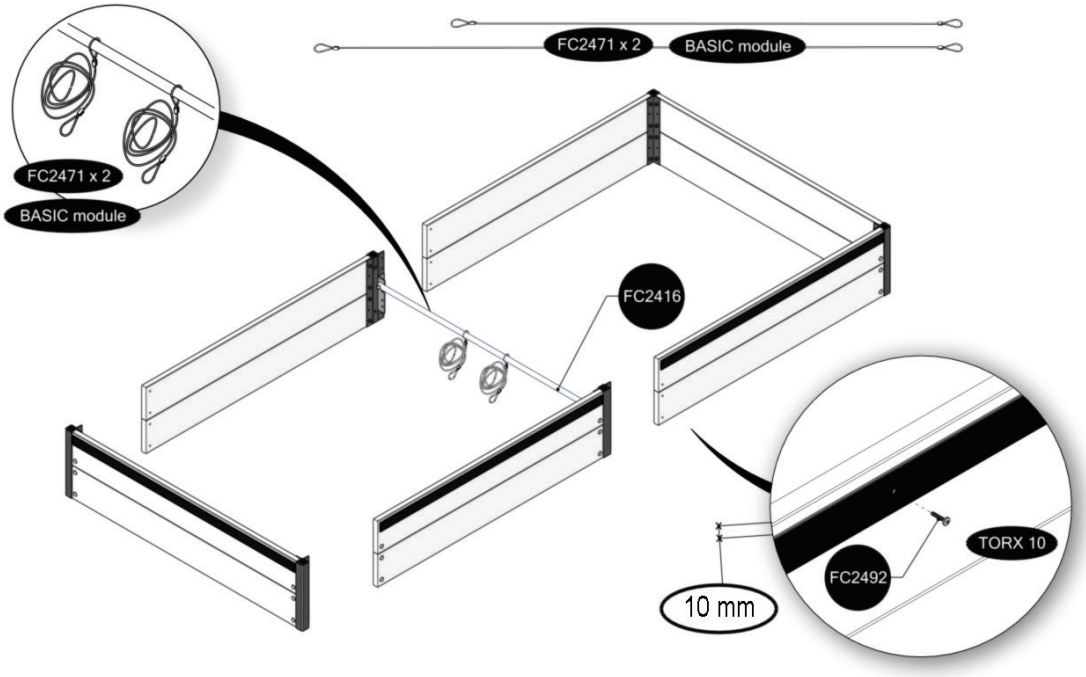

4

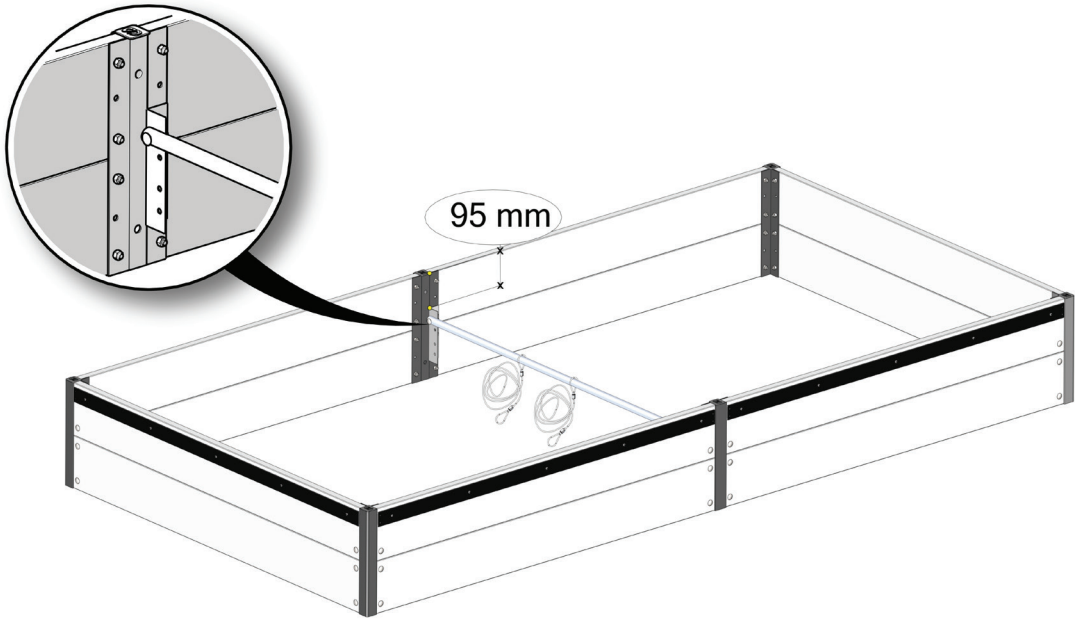

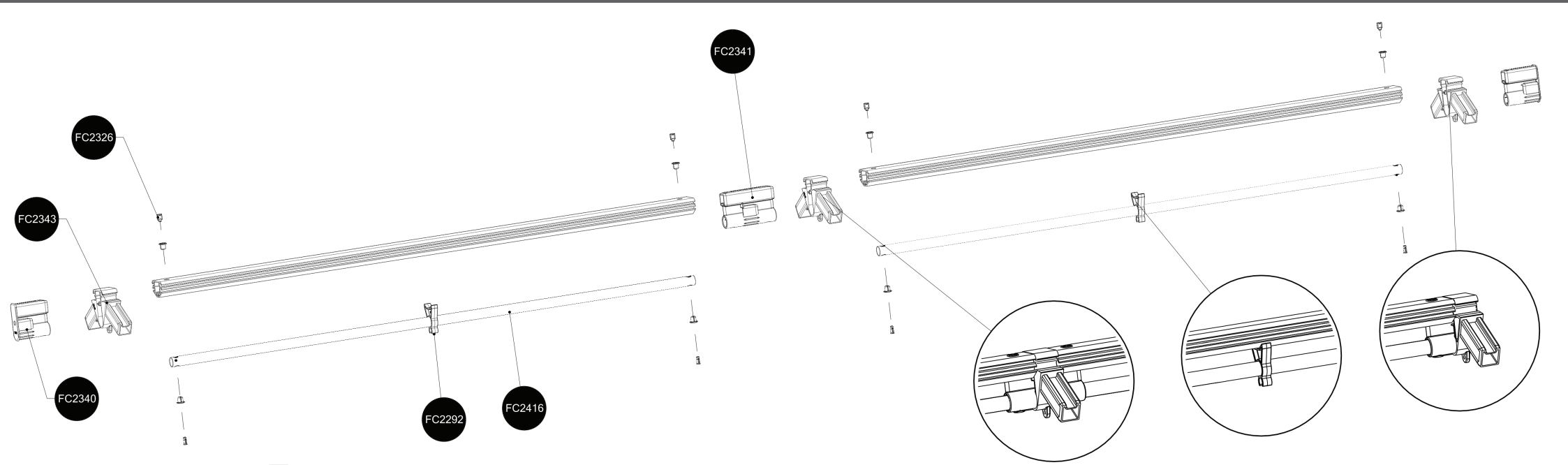
FC2341
FC2326
FC2343
FC2340
FC2292
FC2416

6

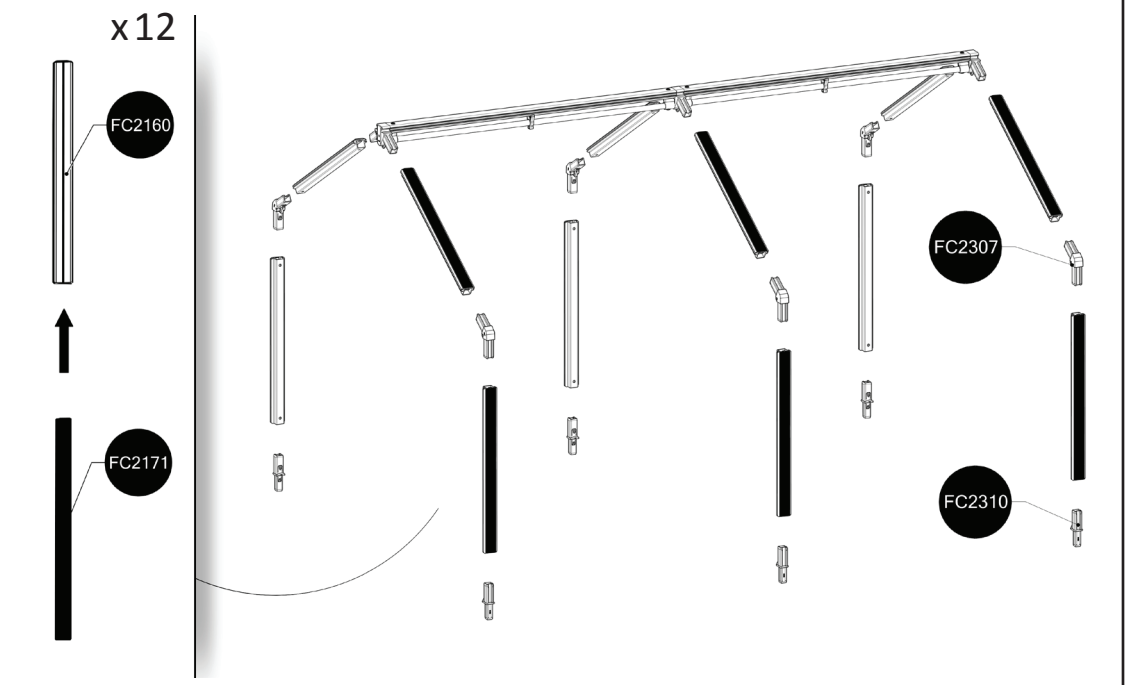
x 12
FC2160
FC2171
FC2307
FC2310

7

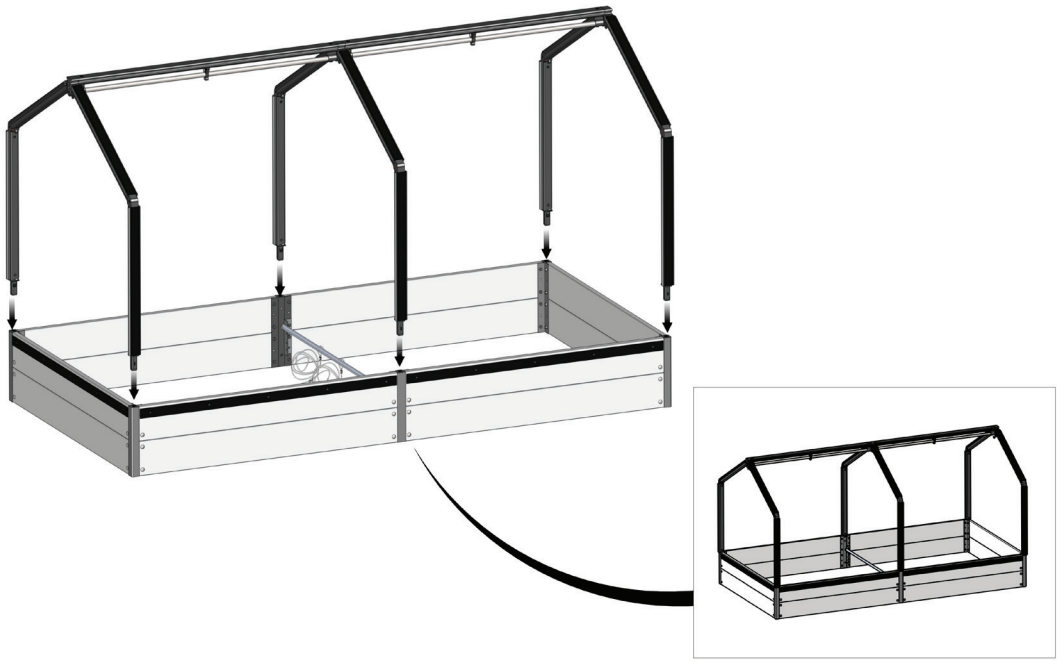

8

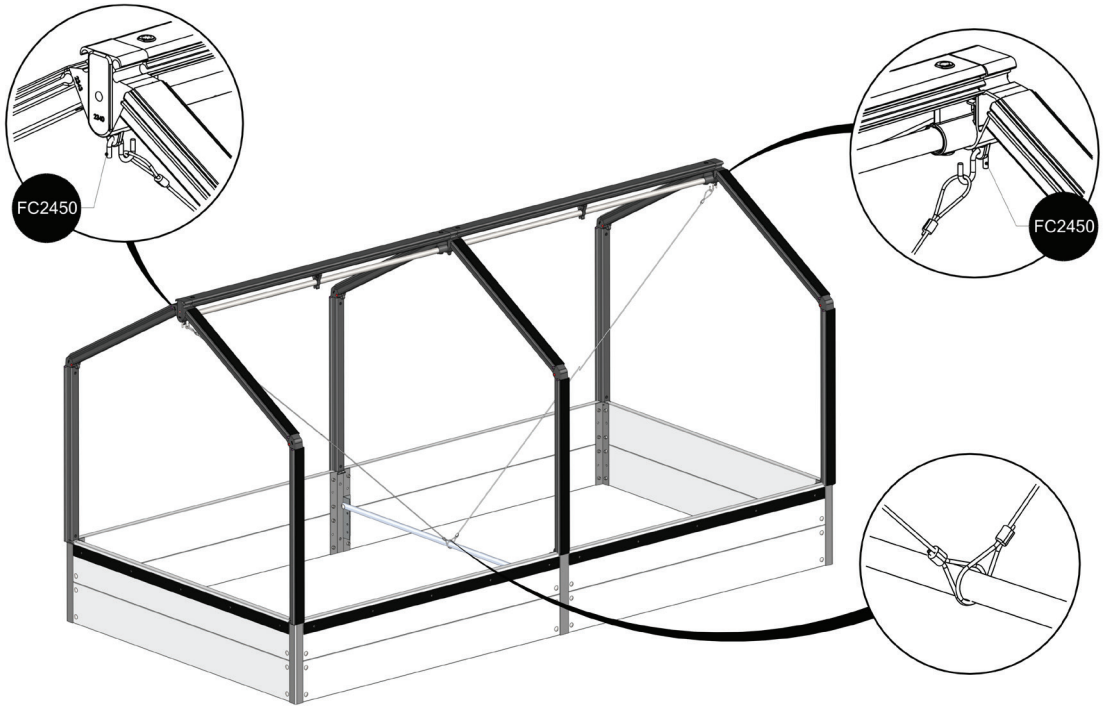
FC2450
FC2450

9

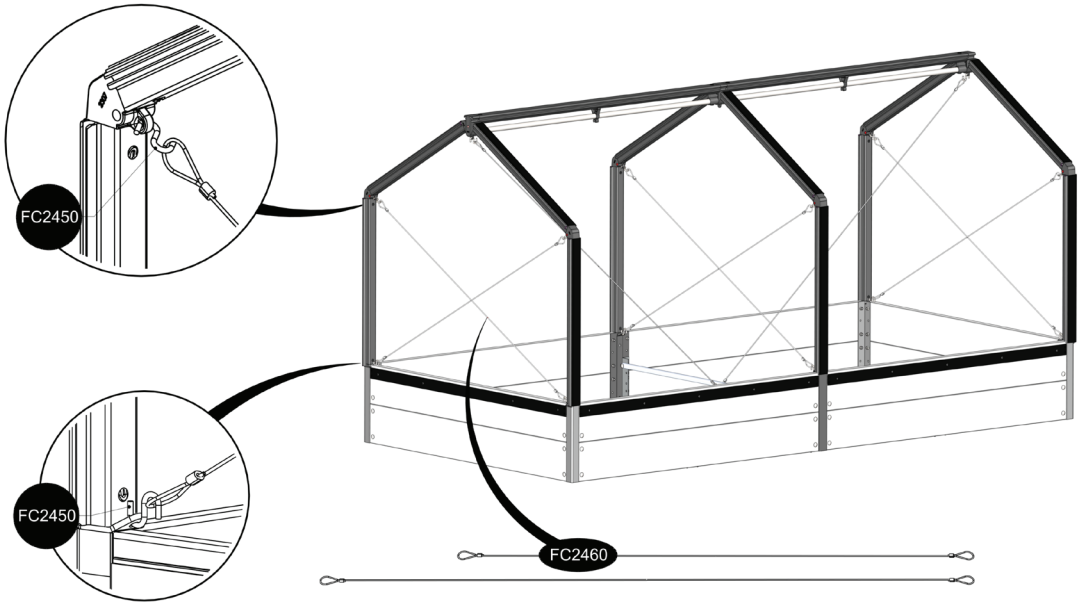
FC2450
FC2450
FC2460

10

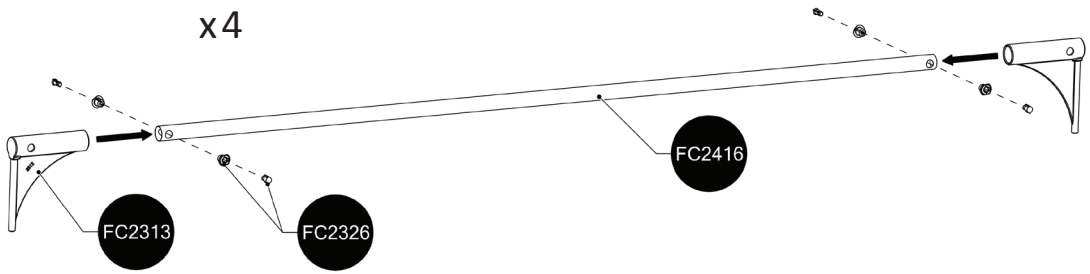
x4
FC2416
FC2313
FC2326

11

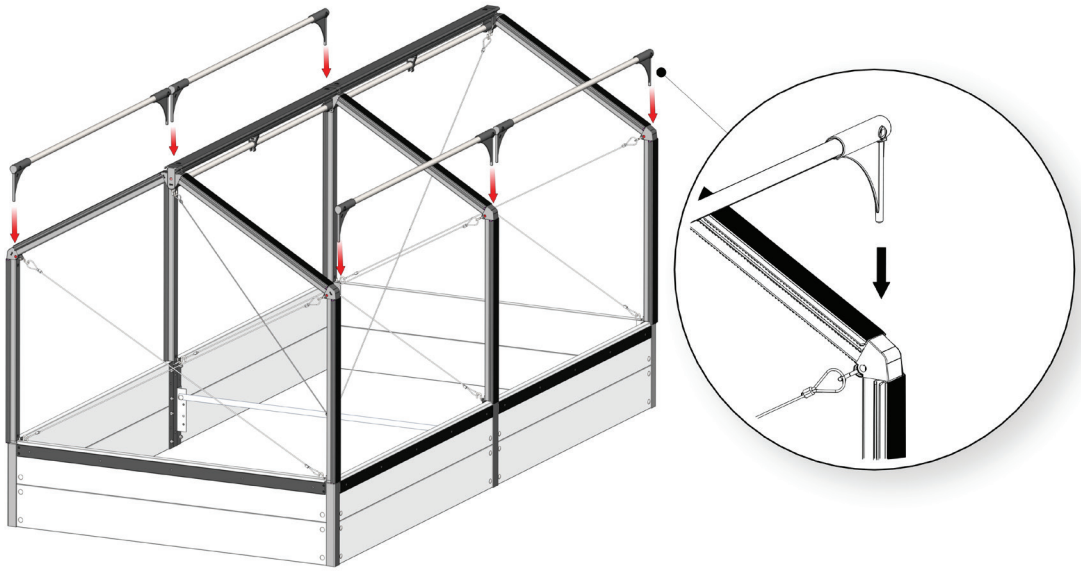

12

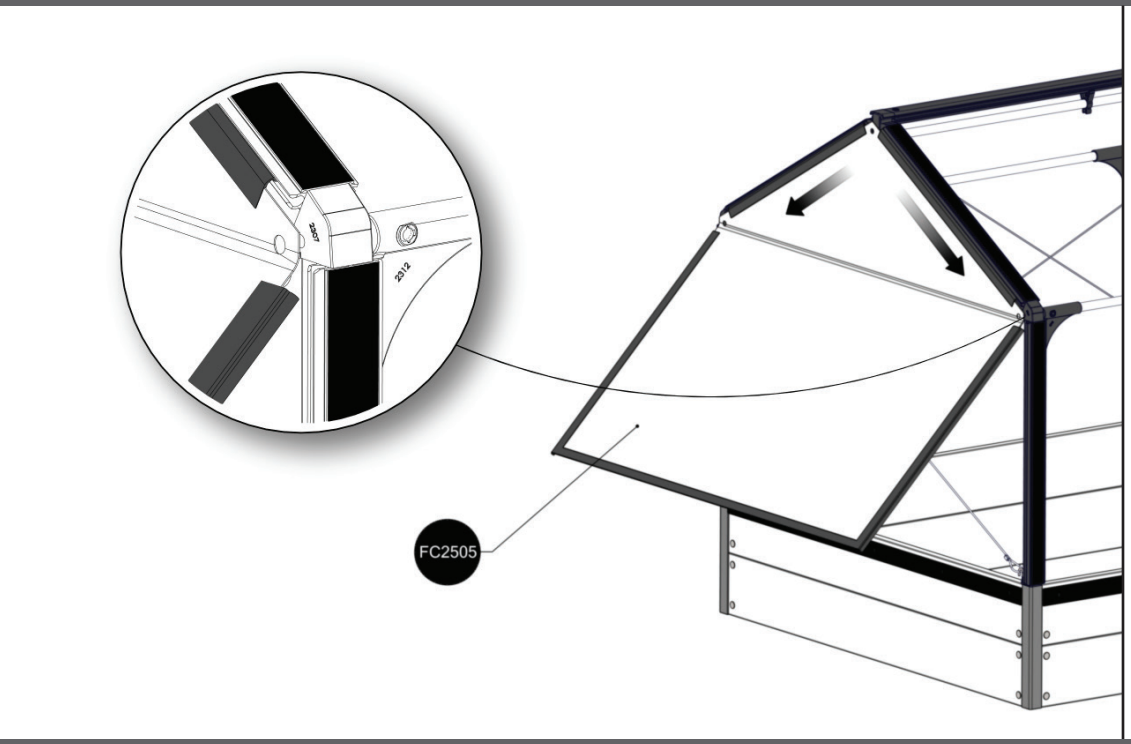

13

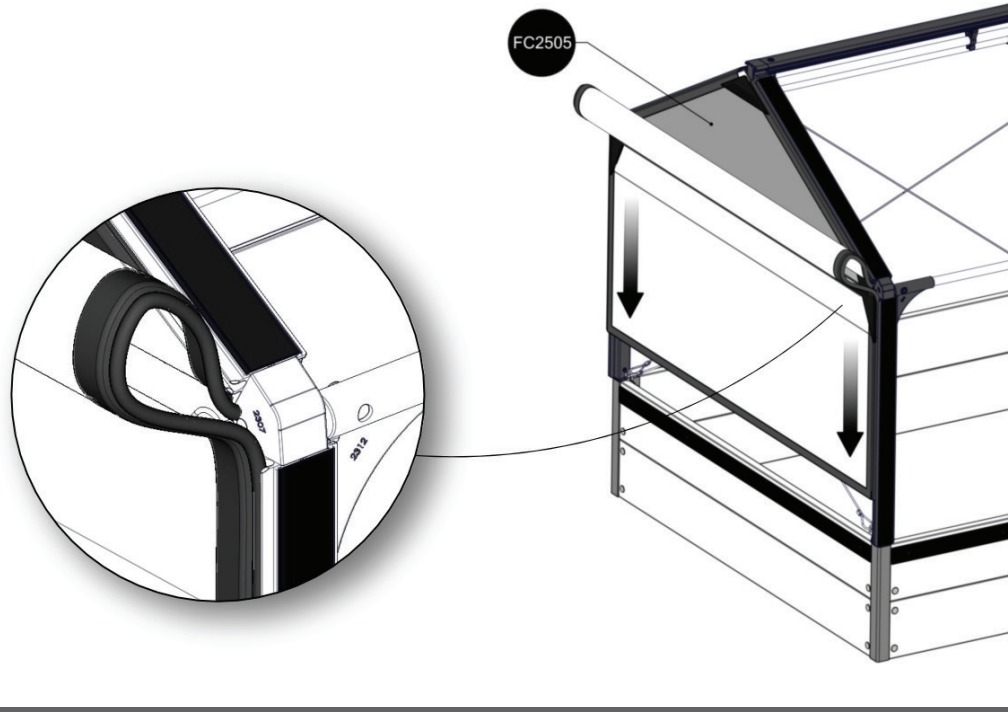

14

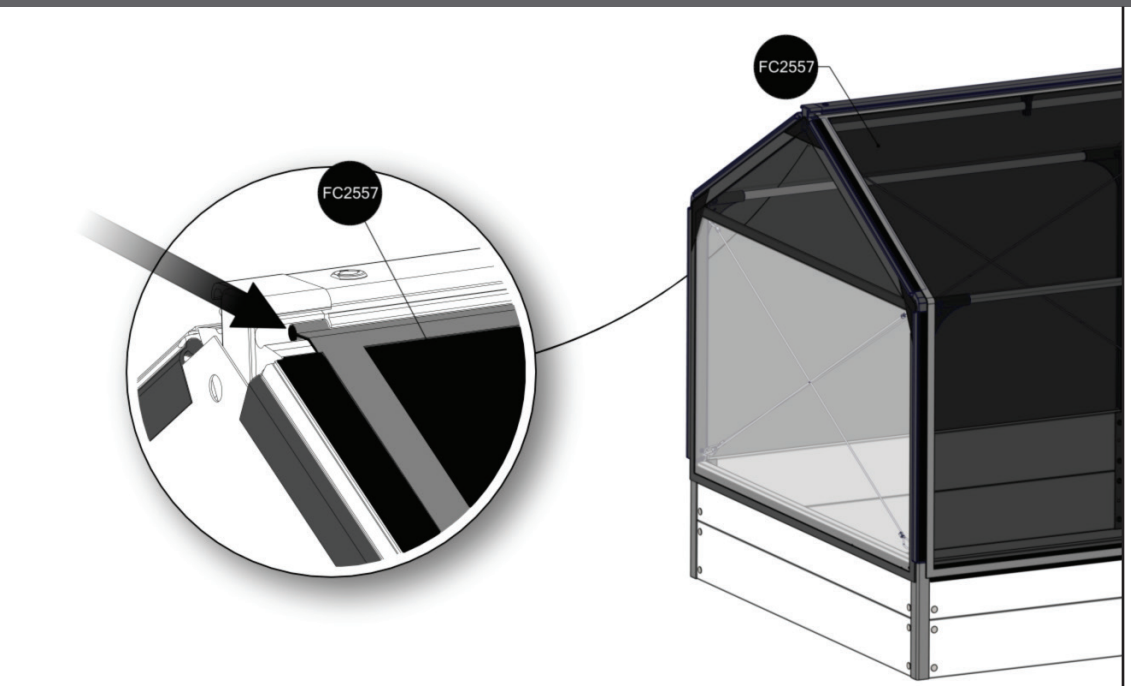

15

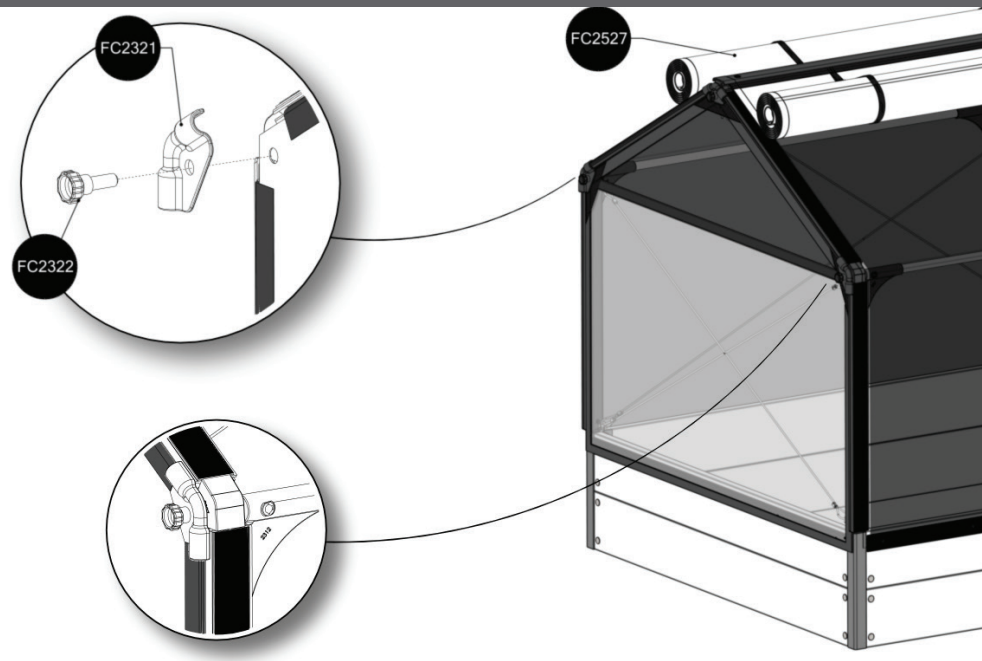

At temperatures more than 30 °C/ 90 °F the plastic sides must be opened when the GrowCamp is mounted.